MEXLE

International Educational Platform

for Informatics based on Embedded Systems

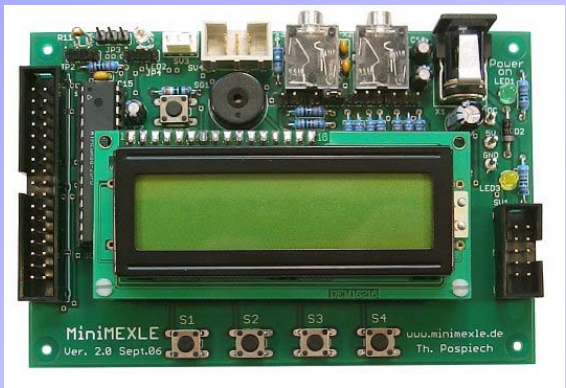

Introduction to System and Philosophy

Overview

1. Introduction
2. MiniMEXLE Hardware
3. ATMEL AVR Microcontrollers
4. Teaching Informatics with MEXLE

© HS Heilbronn • G. Gruhler (2007)

Overview

1. Introduction
2. MiniMEXLE Hardware
3. ATMEL AVR Microcontrollers
4. Teaching Informatics with MEXLE

MEXLE – Philosophy

= **M**icrocontrollers in **EX**periment + **LE**arning

The basic ideas behind are:

1. „Learning by doing“ instead of „chalk-informatics“
2. Benefit of the students „play instinct“ for learning
3. Low cost – affordable also low budget environment
4. Shared platform with international partners
5. Multifunctional use within different study courses
6. Extendable family including a lot of peripherals

MEXLE – The family (1)

- MiniMEXLE
  - Microcontroller ATmega48/88
  - 2x16 LCD-Display, 4 push buttons
  - Analog interface: 2 A/D and 2 D/A channels

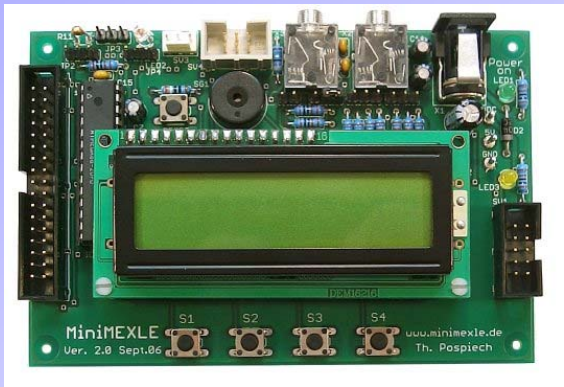

MEXLE - The family (2)

- MEXLE
  - Microcontroller ATmega8515 or AT89S8252
  - 6x7-segment LEDs, 4 buttons, 4 switches
  - Bar graph, serial interface to PC

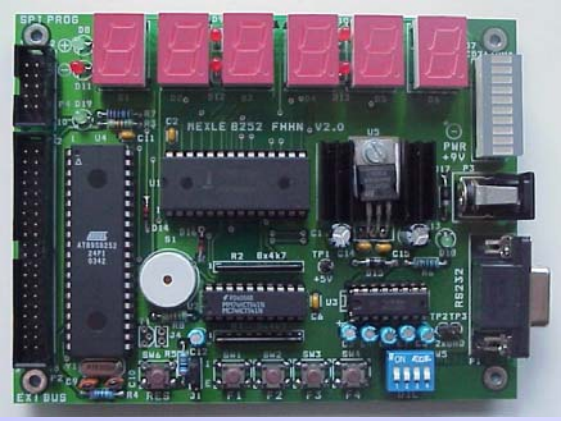

MEXLE - The family (3)

- µMEXLE
  - Microcontroller ATtiny2313 or AT89S2051
  - compact, no display, simple peripherals

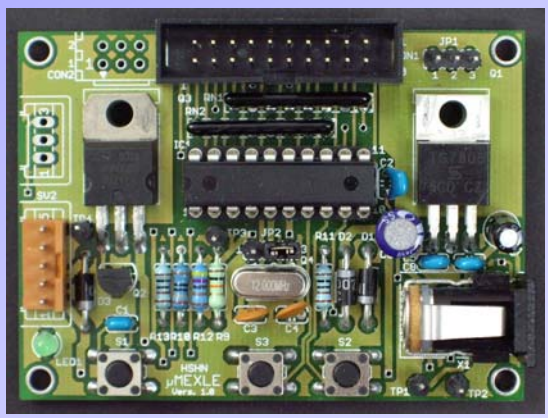

MEXLE - The family (overview)

- MiniMEXLE
  Microcontroller ATmega48/88
  2x16 LCD-Display, 4 push buttons
  Analog interface: 2 A/D and 2 D/A channels
- MEXLE
  Microcontroller ATmega8515 or AT89S8252
  6x7-segment LEDs, 4 buttons, 4 switches
  Bar graph, serial interface to PC
- µMEXLE
  Microcontroller ATtiny2313 or AT89S2051
  compact, no display, simple peripherals
- MEXLE family
  all boards can be used with AVR Controllers
  - common environment for development
  - common programming interface

MEXLE – Development Environment (1)

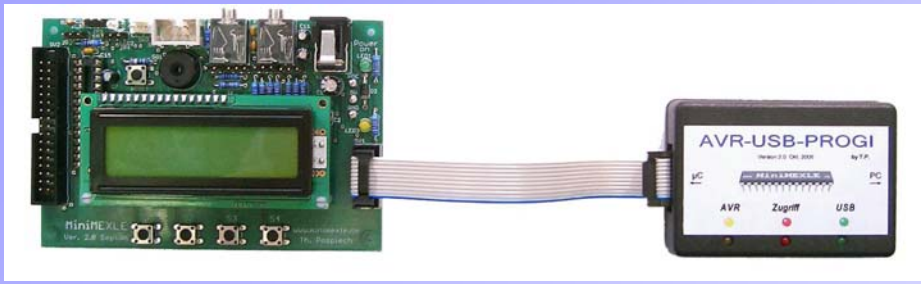

MEXLE board plus PROGI (programmer board) with USB interface

- Simple connection to standard PC
- Low cost programmer usable for most AVR microcontrollers
- Compatible to STK-500 ATMEL evaluation board programmer
- Programmer powered by USB connection

MEXLE – Development Environment (2)

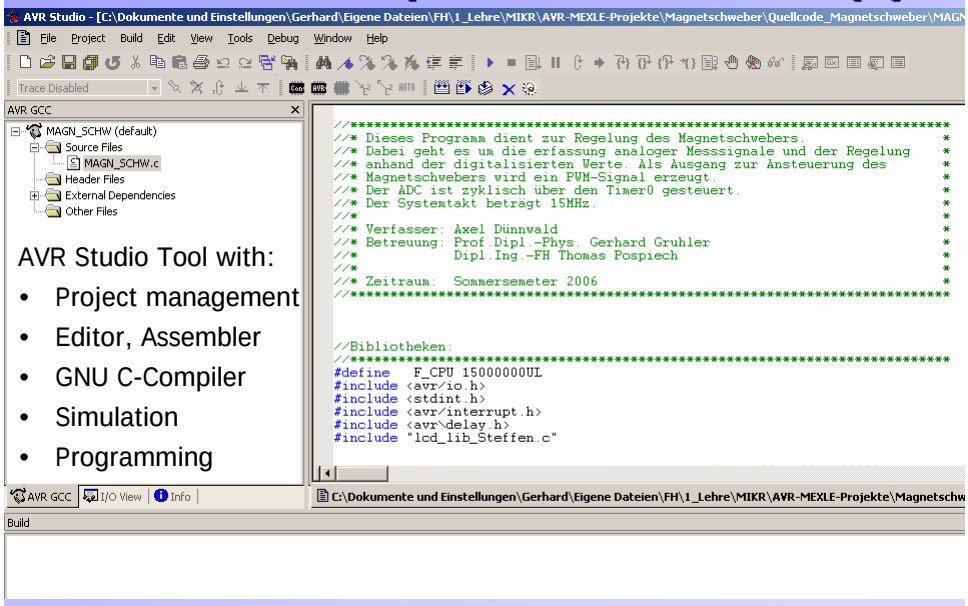

AVR Studio Tool with:

- Project management
- Editor, Assembler
- GNU C-Compiler
- Simulation
- Programming

MEXLE – Network

- Heilbronn University, Germany:
  Faculty of Mechanics and Electronics
  (10 Staff, 250 Students/year)
- International:
  - STU Bratislava, Slovakia
  - UNN Newcastle, GB
  - GTU, TESAU, ATSU, Georgia

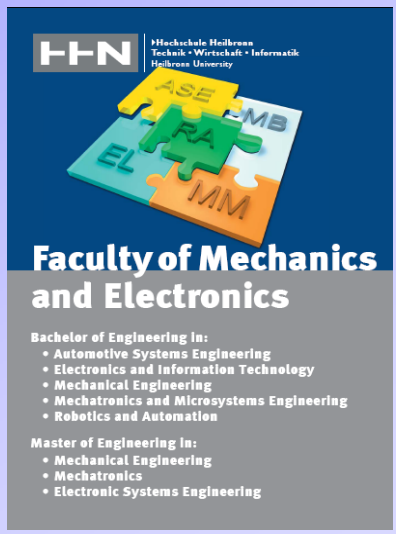

MEXLE – Educational Platform

MEXLE Webpage

- Basic + fixed information
- Created by MEXLE team
- Responsibility on staff

MEXLE Wiki

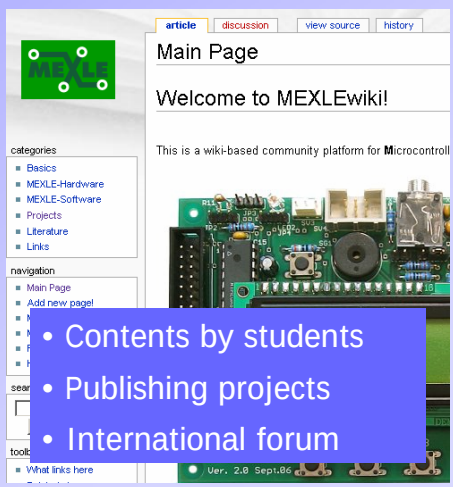

- Contents by students
- Publishing projects
- International forum

Overview

1. Introduction
2. MiniMEXLE Hardware
3. ATMEL AVR Microcontrollers
4. Teaching Informatics with MEXLE

MiniMEXLE – Hardware

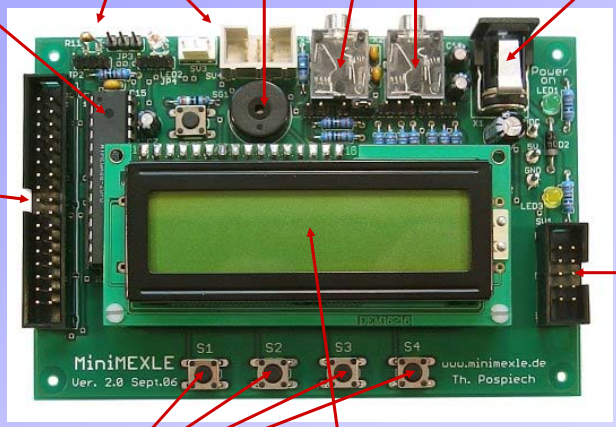

MiniMEXLE – Block diagram

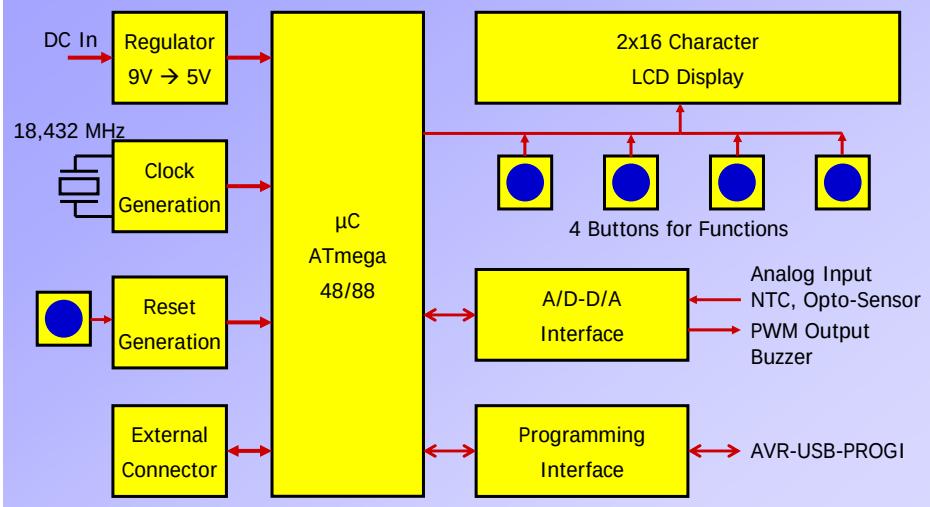

MiniMEXLE – Power Supply

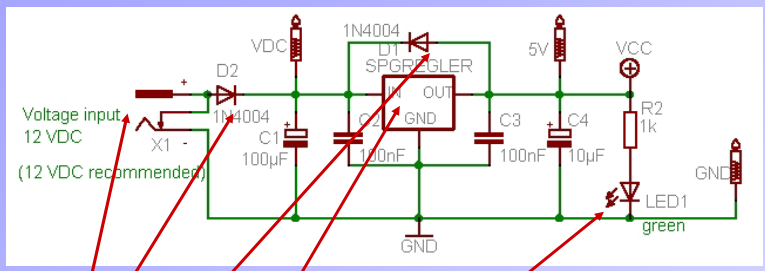

- DC input voltage 9 - 12 VDC (AC Adaptor) ; Tip has + polarity
- Regulator 7805 creates Vcc 5V. C2, C3 for stability reasons
- Diode D2: for safety reasons: against wrong polarity at DC input
- Diode D1: for safety reasons: protects regulator against back powering
- Power-ON-LED (LED1)

MiniMEXLE – Clock and Reset Generator

- Reset sources:
  - RC (Power-on)
  - Button
  - External (PROGI)
- Connector for „Debug-Wire“ interface
- Separate filtered analog supply
- External crystal (18,432 MHz)

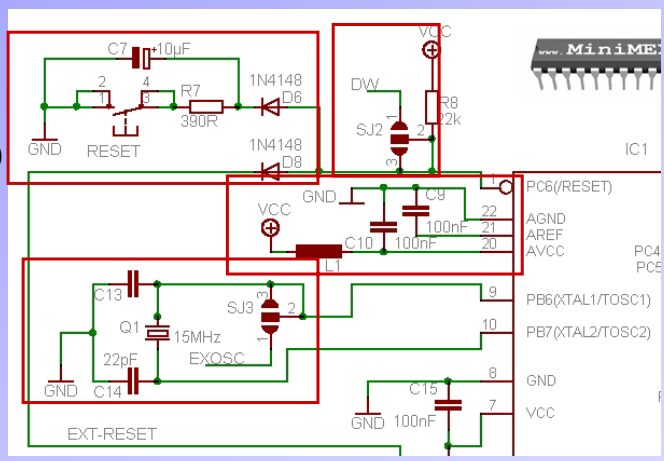

MiniMEXLE – User Interface

- 2x16 LCD display with backlight (connected by 4 Bits) (RS: Data/Control) (E=1: Enable Display) (R variable: Contrast)
- 4 Buttons connected at the same pins as the LCD display (E=0: Read buttons) (Port µC bidirectional)

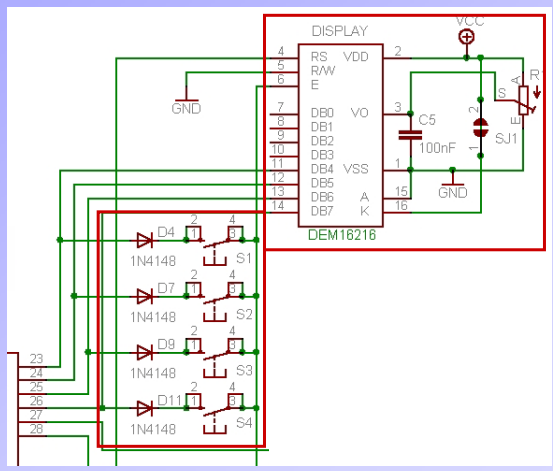

MiniMEXLE – Analog Interfaces

- 2 Analog Inputs 0 – 5 V
  - voltage protected
    R4, D3, D5; R14 ,...
  - DC/AC coupling (C6, C11)
    selectable by jumper
  - Low Pass 1,6 kHz (C8, C12)
- Alternative:
  - Temperature measurement:
    (NTC Resistor R11)
  - Light intensity:
    (LED2 used as photo sensor)
- 2 PWM Outputs (8 Bit)
  - Low Pass 1,6 kHz (selectable)
  - on Board Buzzer

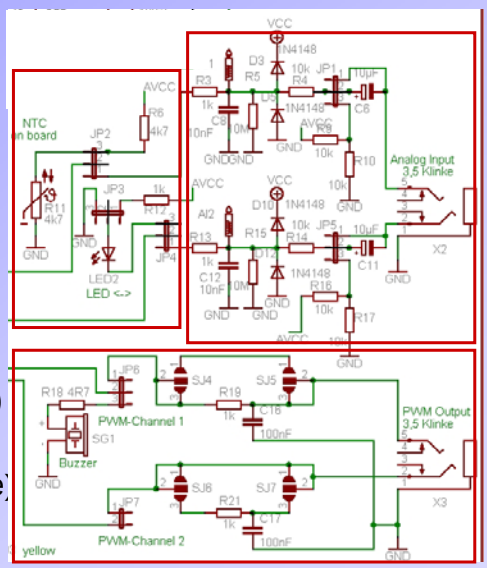

miniMEXLE – Expansion Connectors

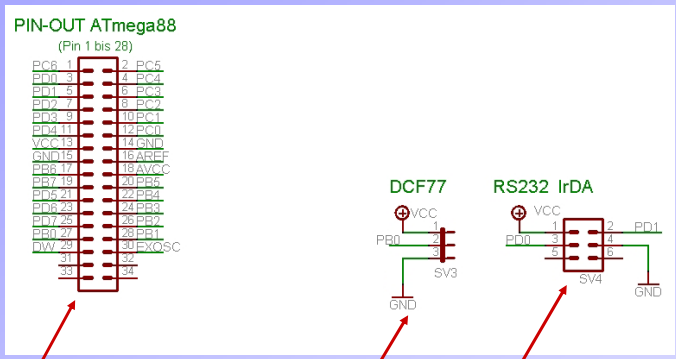

- Full access to signals at µC pins by External Connector – 34 pins
- Connector for radio clock signal (DCF77) - 3 pins
- Connector for serial interface, IrDA or USB expander – 6 pins

MiniMEXLE – Programming Interface

- SPI Interface
  (Serial Peripheral Interface)
  to programmer (PROGI)
  (programming active
  for RESET = 0)
- Visual interface by LED3
- SPI signal names:
  MISO = Master IN, Slave OUT
  MOSI = Master OUT, Slave IN
  SCLK = Serial Clock
  SS = Slave Select

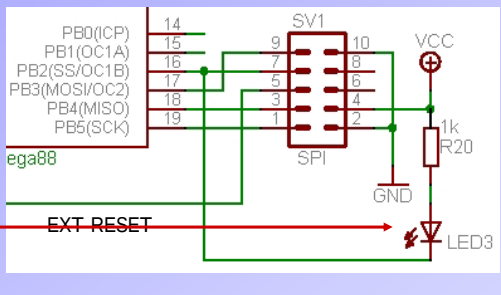

AVR-USB-PROGI – Function

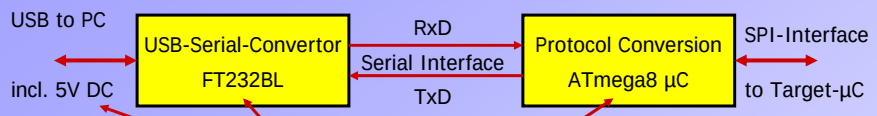

- Connection direct to USB (COM interface emulation)
  - Power supply of PROGI programmer by USB
  - specific USB driver for FT232BL needed on PC
- USB protocol to serial protocol conversion by FT232BL
  - no programming needed
- µC ATmega8: protocol conversion to SPI for target interface
  - programming of ATmega8 possible by PC trough USB
    (jumper placement needed)

AVR-USB-PROGI – Hardware

- Compact unit in plastics box
- USB connector series A to PC
- 10 pin connector to target µC
- USB-Serial-Converter on bottom plane
- 3 LEDs for status

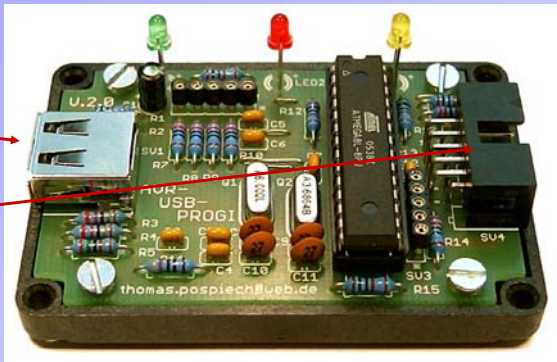

Overview

1. Introduction
2. MiniMEXLE Hardware
3. ATMEL AVR Microcontrollers
4. Teaching Informatics with MEXLE

AVR – µC family with RISC structure

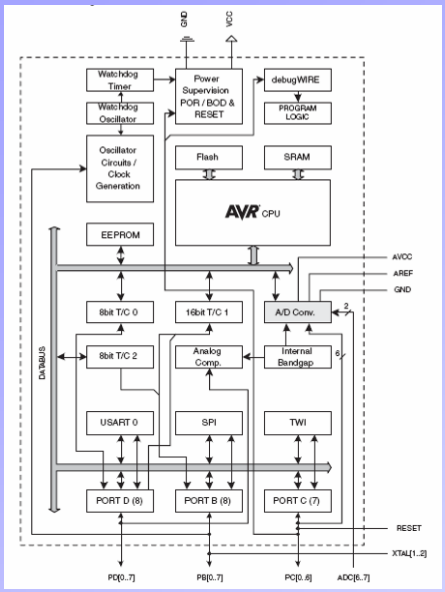

Reduced **I**nstruction **S**et **C**omputer

- Powerful 8 Bit RISC CPU
- Program Flash 8 KByte
- Data EEPROM 512 Bytes
- Data SRAM 1 KByte
- 23 programmable I/O lines
- 3 Timer/Counter Units with PWM
- USART, SPI, I²C Interface
- Analog Comparator
- 10 Bit A/D-Converter
- In-System Self-programmable

AVR – CPU core

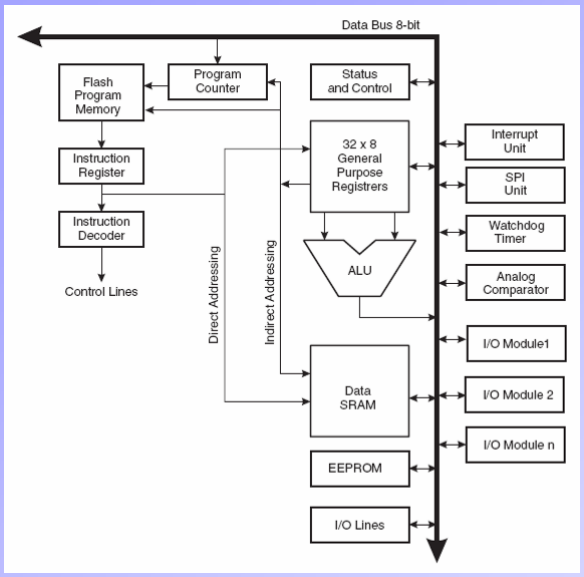

- Harvard structure
- 131 instructions (most single cycle)
- 32 x 8 Bit registers
- Fully static operation
- 20 MIPS at 20 MHz
- 2-cycle HW multiplier

AVR – Clock Generation

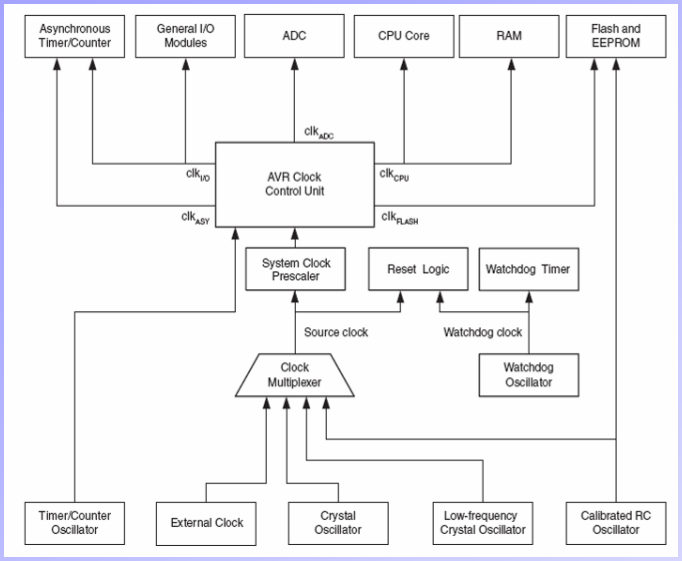

- 4 Clock sources
  - HF Crystal
  - LF Crystal
  - RC-Oscillator
  - External Clock
- Programable prescaler
- Watchdog timer
- Flexible power management
- Different sleep modes

AVR – RESET Functions

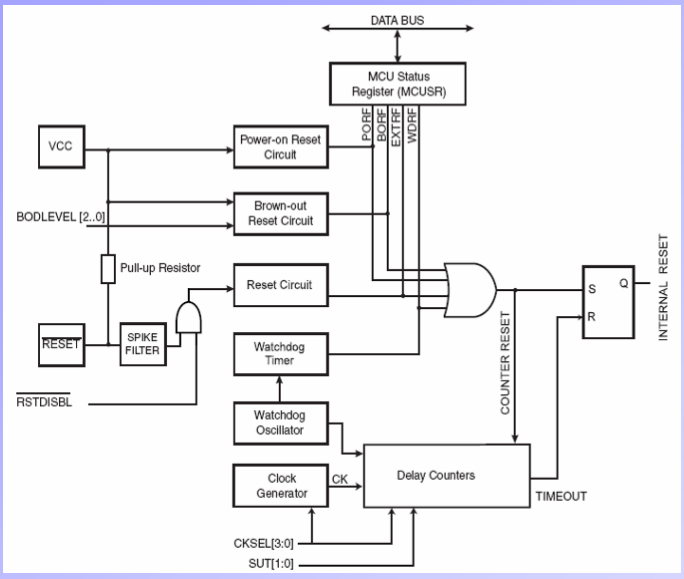

- Power-on Reset (no external components)
- External Reset with Spike Filter
- Brown-out Reset (monitoring Vcc)
- Watchdog Reset (separate Osc.)
- Reset source is readable in Status Register

AVR – On-chip Memory

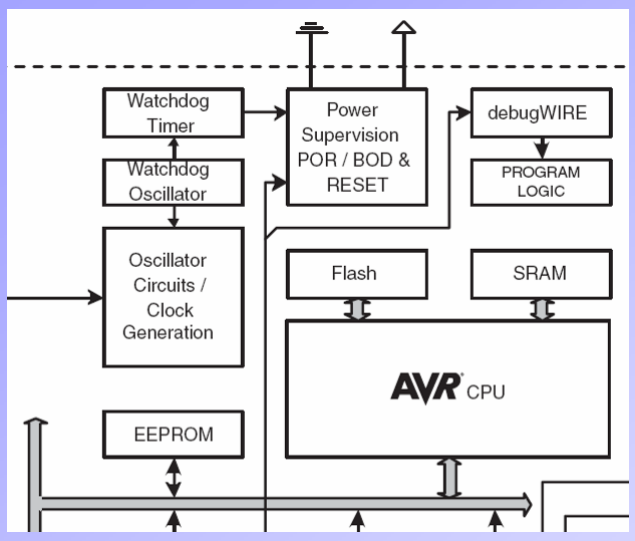

- 8 KByte Flash for program code (programming parallel or SPI)
- Bootloader Flash
- Lock bits for software protection
- 1 KByte SRAM for Data (adress space with registers+ I/O)
- 512 Bytes EEPROM for nonvolatile data in I/O-space

AVR – On-chip Peripherals

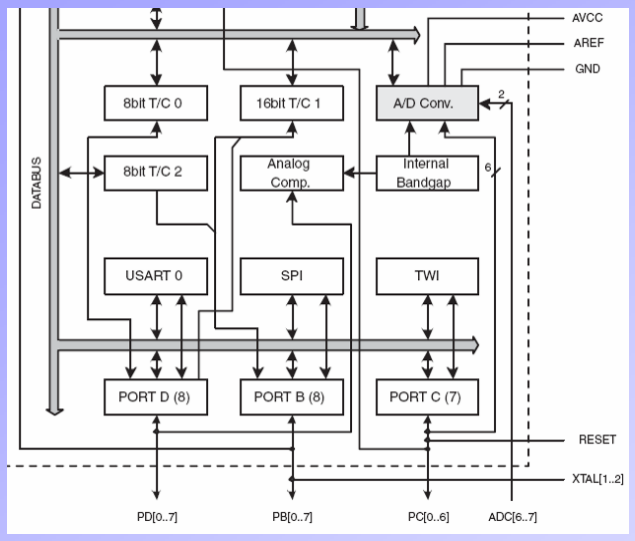

- Up to 23 digital bidirectional I/O-lines (Read-Modify-Write functionality)
- 3 Timer/Counters 2x 8 Bit, 1x 16 Bit (with Capture and Compare units and PWM generation)
- 10-Bit A/D-Converter (up to 72 kHz rate)
- 3 serial interfaces (USART, SPI, TWI)

AVR – Digital I/O

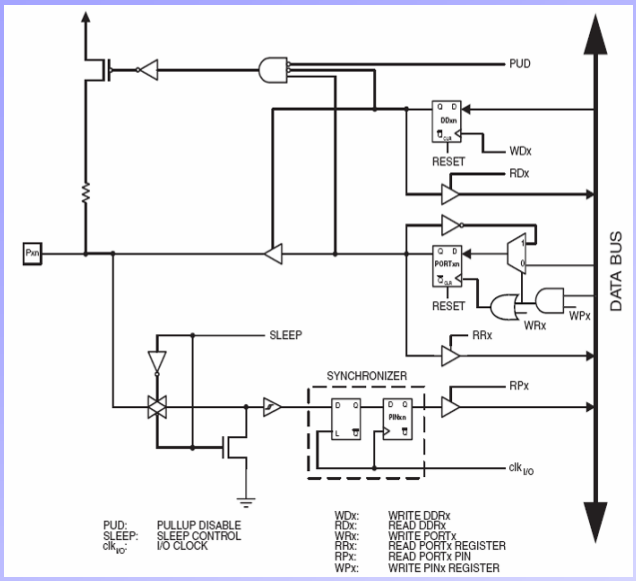

- Flexible structure (In, Out, In/Out, Read/Modify/Write) by 2 Flip-Flops
- Selectable Pull-Up resistor per pin
- Sleep mode inputs
- Synchronizer for external signals to avoid meta stable situations
- Alternate functions selectable per pin

AVR – Timer/Counter Units

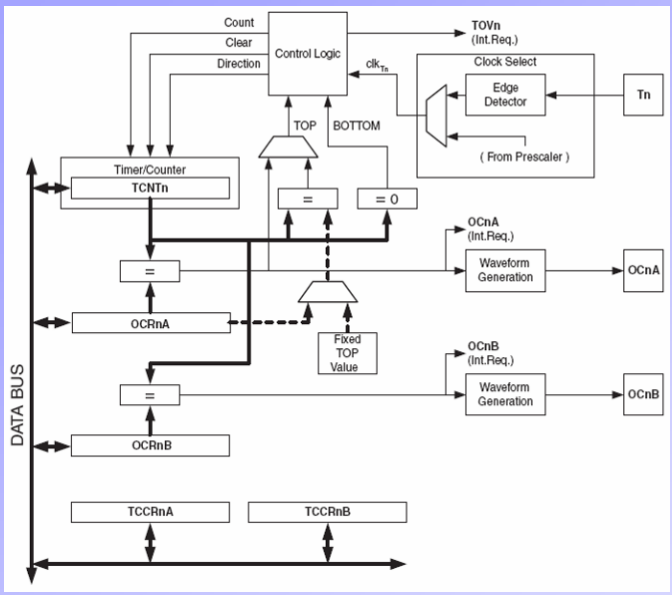

- Timer for internal clock signals with extra prescaler
- Counter for external signals with edge detect
- Output compare functions for PWM waveforms
- Input compare function only on 16 Bit Timer 1 (measurement)

AVR – SPI Interface

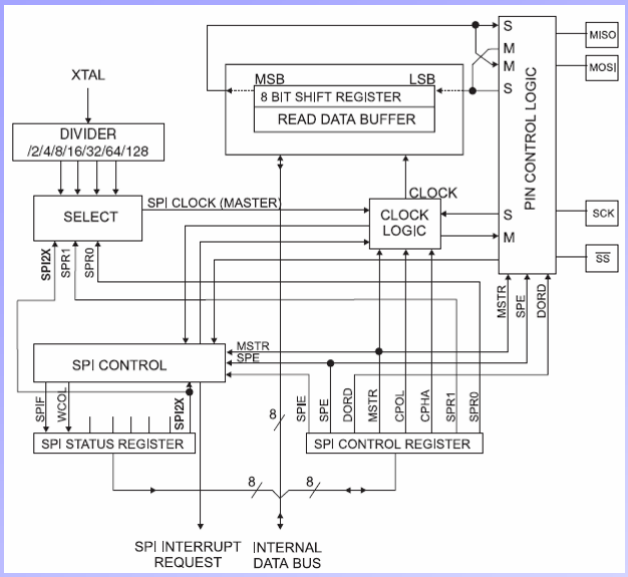

- High speed serial 8-Bit interface for peripherals and programming of chip
- Max. speed Clk/2 = 10 MBit/second
- Master/Slave structure with full-duplex function
- Clock prescaler
- Wake up functionality

AVR – USART Interface

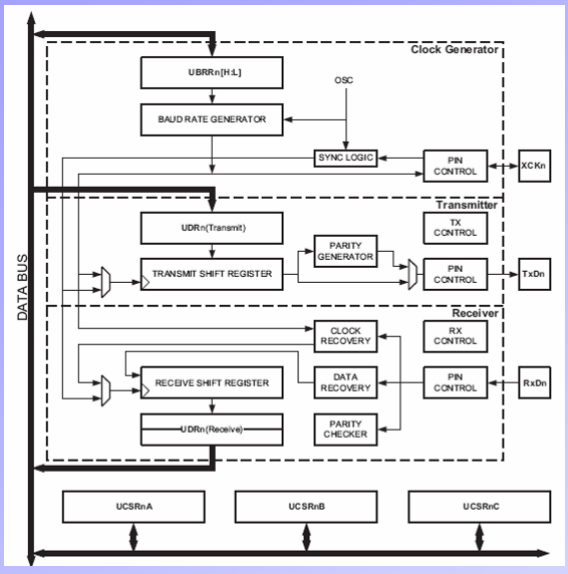

- Full-duplex 8 Bit USART with 5..9 data bits and 1..2 stop bits
- Internal baud rate generator
- Asynchronuous and synchronuous modes
- Multiprocessor mode for communication network
- Noise filtering
- High speed SPI mode

AVR – TWI / I²C Interface

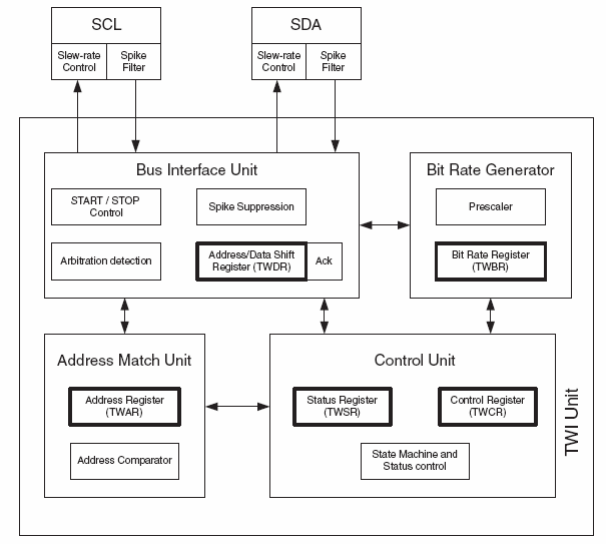

- Powerful 2 lines interface (SCL, SDA)
- Master and Slave operation
- Multimaster ability
- Up to 400kBits/sec
- Up to 128 slave adress space
- Adress recognition for wake-up functionionality

AVR – A/D Converter

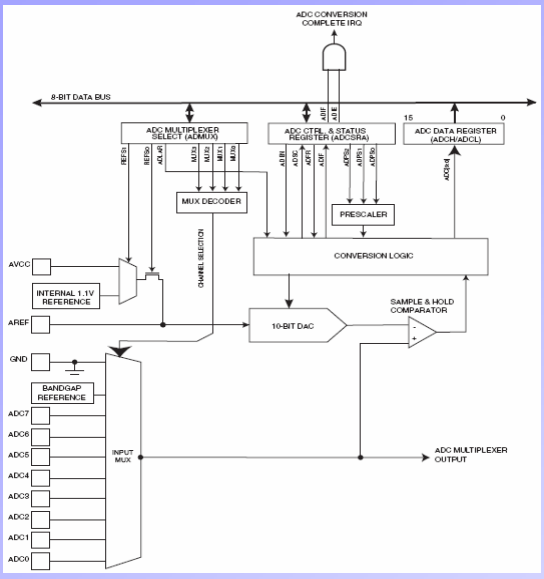

- 6 A/D-channels
- up to 10 Bits resolution
- 13–260 µs conversion time (max. 15 kSamples/sec with full resolution)
- Internal bandgap reference
- Input voltage range from GND - Vcc
- Several clocking modes:
  - free running
  - single conversion
  - event triggered

AVR – PWM Generation

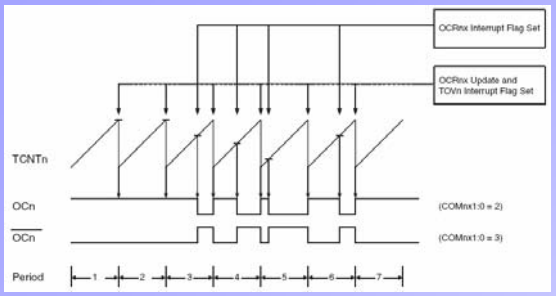

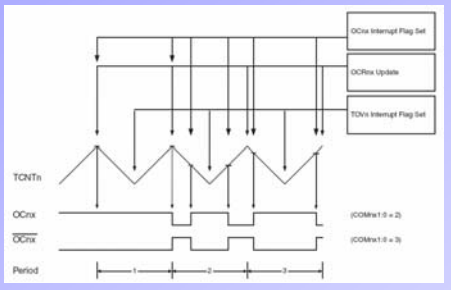

- Timer-based PWM generation by Output Compare Registers and additional logic
- Different waveforms with SET clear and TOGGLE of the output pin
- Fast PWM-Modes (up to 72 kHz at 8 Bits)
- Single slope application with fixed or variable puls period
- Phase correct PWM-Mode especially for motor drives applications

AVR – Internet Resources

http://www.atmel.com/products/avr/

http://www.avrprojects.net/

Overview

1. Introduction
2. MiniMEXLE Hardware
3. ATMEL AVR Microcontrollers
4. Teaching Informatics with MEXLE

What is Informatics?

Technical Informatics

Hardware components
Microcontrollers
Architecture of Computers
Computer Networks

Practical Informatics

Algorithms
Data Structures
Programming languages
Operating systems

Theoretical Informatics

Theory of automats
Formal semantics
Analysis of algorithms
Compilers

Applied Informatics

Information systems
Computer graphics
Artificial intelligence
Digital signal processing

Basic Informatics for Engineers

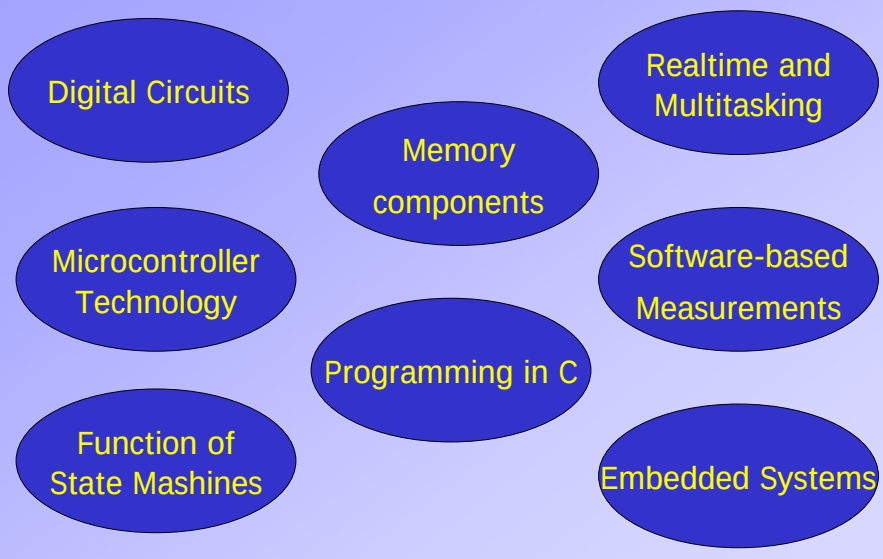

Technical Informatics - Contents

Course run in the 1. Semester

- Number systems in the informatics
- Digital logic components / Boolean algebra
- Developing combinatorial logic
- Practical realization of combinatorial logic
- Flip-Flops and memories
- State machines and their development
- Architecture and components of microcontrollers (µC)
- Structure of an AVR-based microcontroller system
- Programming of microcontrollers with assembler
- Realization of a sample project in software

Technical Informatics - Tools

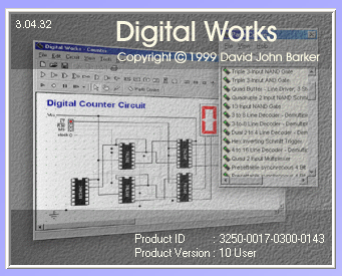

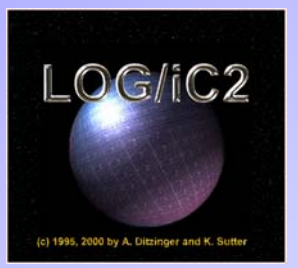

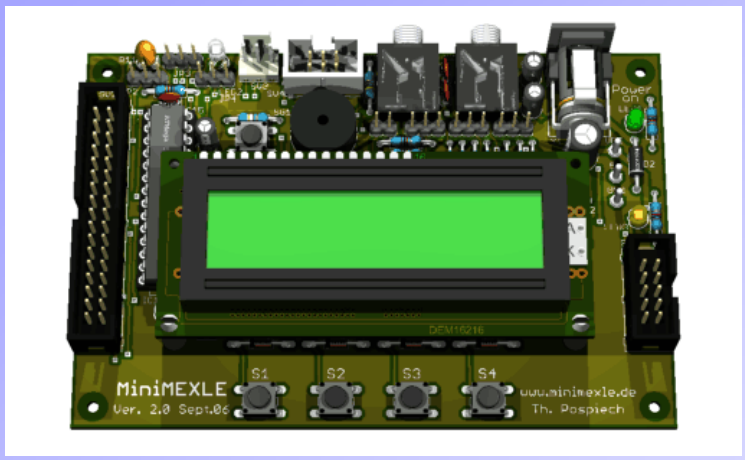

I thank you very much for your attention